RIVET KING®

RIVETNUTS

RIVETKING® RIVETNUTS

RIVETKING® RIVETNUT PICTORIAL CONTENTS

IKF SERIES®
STANDARD RIVETNUT
RIBBED BODY • LOW PROFILE HEAD

PAGES 03,04,06

IKR SERIES®
STANDARD RIVETNUT • RIBBED BODY
• REDUCED HEAD

PAGE 11

IRL SERIES™
STANDARD RIVETNUT • SMOOTH BODY
• LARGE HEAD

PAGE 02

IRR SERIES™
STANDARD RIVETNUT • SMOOTH BODY
• REDUCED HEAD

PAGE 11

ISR SERIES™
STANDARD RIVETNUT • SWAGING
• STRAIGHT KNURL

PAGES 03,04,06

ISN SERIES®
STANDARD RIVETNUT • SWAGING
• DIAMOND KNURL (FOR PLASTICS)

PAGE 11

IHF SERIES™
STANDARD RIVETNUT • HALF HEX BODY
• LOW PROFILE HEAD

PAGE 02

NKL SERIES™
EUROPEAN STANDARD RIVETNUT
• RIBBED BODY • LARGE HEAD

PAGE 11

NKR SERIES™
EUROPEAN STANDARD RIVETNUT
• RIBBED BODY • REDUCED HEAD

PAGES 03,04,06

NKC SERIES™
EUROPEAN STANDARD RIVETNUT
• RIBBED BODY • COUNTERSUNK HEAD

PAGE 11

NSL SERIES™
EUROPEAN STANDARD RIVETNUTS
• SMOOTH BODY • LARGE SERRATED HEAD

PAGE 02

NHL SERIES™
EUROPEAN STANDARD RIVETNUTS
• FULL HEX BODY • LARGE HEAD

PAGE 11

NHR SERIES™
EUROPEAN STANDARD RIVETNUT
• FULL HEX BODY • REDUCED HEAD

PAGES 03,04,06

IPB SERIES™
STANDARD RIVETNUT • QUADRANUT
• PRE-BULBED SHANK

PAGE 11

IPN SERIES™
STANDARD RIVETNUT • QUADRANUT
• STRAIGHT SHANK

PAGE 02

JK SERIES™
STANDARD RIVETNUT • QUADRANUT
• STAMPED

PAGE 11

JF SERIES™
STANDARD RIVETNUT • RUBBERNUT

PAGE 11

RIVETKING® RIVETNUT PRODUCT OVERVIEW

RIVET NUTS

RIVETKING®		AVK®	BOLHOFF®	AVDEL®	SHEREX®	ATLAS®	POP®	MARSON©	RIBBED BODY	SMOOTH BODY	HALF HEX BODY	FULL HEX BODY (VARIABLE GRIP RANGE)	SLOTTED BODY	LOW PROFILE HEAD	REDUCED HEAD	LARGE HEAD	COUNTERSUNK	FASTENING TO METAL	FASTENING TO THIN, SOFT OR BRITTLE MATERIALS	FOR THIN, SOFT OR BRITTLE MATERIALS	FASTENING TO WOOD	FASTENING TO BLIND HOLES	FASTENING TO BLIND HOLES / FOOTPRINT	SMALL BLINDSIDE PROTRUSION / FOOTPRINT	FOR ROUND HOLES	FOR HEXAGON HOLES	FOR USE WITH SPIN/SPIN TOOLS	FOR USE WITH SPIN/PULL TOOLS	FOR USE WITH SPIN/PULL TOOLS
AMERICAN STANDARD, INCH AND METRIC																													
IKF™	AMERINUT™	A-L	-	DL	CAL	AEL	TL	573	◆					◆					◆					◆		◆		
IKR™	AMERINUT™	A-K	-	DK	CAK	AEK	TK		◆						◆				◆					◆		◆		
IRL™	AMERINUT™	R-N	RIVNUT® (FLAT HEAD)	-	CA	AES	ST	571 / 572		◆						◆			◆					◆				◆
IRR™	AMERINUT™	A-O	-	9654/9655	CAO	AEO		574 / 575		◆					◆				◆					◆		◆		
IHF™	AMERINUT™	A-H	-	-	CAH	AEH	TH				◆			◆					◆							◆		
ISR™	SWAGENUT™	A-T	-	SUPERSERT® (FB08)	CFT	AET		578 / 579	◆										◆			◆	◆	◆		◆		
ISN™	SWAGENUT™	A-W	-	-	CFW										◆						◆	◆	◆	◆		◆		
IPN™	QUADRANUT™	A-R	PLUSNUT® (SXPN-P)	VERSANUT® (VN21)	CPN	AES-P							◆		◆						◆				◆	◆		◆
IPB™	QUADRANUT™	A-R	PLUSNUT® (SXPN-PB)	VERSANUT® (VN21)	CPB	AES-P-PB							◆								◆				◆	◆	◆	
JK™	JK NUT™	-	-	-	-		JACKNUT®						◆			◆					◆				◆	◆	◆	
JN™	RUBBERNUT™	-	-	-	-		WELLNUT®			◆						◆			◆	◆					◆	◆		
EUROPEAN STANDARD, INCH AND METRIC																													
NKL™	EURONUT™	-	EZ (6211)	EUROSERT®*	CLM				◆							◆			◆					◆				◆
NKR™	EURONUT™	-	EZ (6212)	EUROSERT®*	CKM				◆						◆				◆					◆				◆
NKC™	EURONUT™	-	RIVNUT® (C'SUNK HEAD)	TSN®*	UFO RS				◆								◆		◆					◆				◆
NSL™	EURONUT™	-	-	TSN®*	UPO					◆						◆			◆					◆				◆
NHL™	EURONUT™	-	EZ (6221)	HEXSERT®*	CFM							◆				◆			◆							◆		◆
NHR™	EURONUT™	-	EZ (6222)	HEXSERT®*	CFSM							◆			◆				◆							◆		◆

◆ STANDARD FEATURE ◆ APPLICATION / PRODUCT DEPENDENT

RIVETING TOOLS

RIVETKING®	AVK®	BOLHOFF®	AVDEL®	SHEREX®	ATLAS®	POP®	MARSON©
MANUAL HAND TOOLS							
RK-100	AA170					PNT110	39200
RK-21	AA480	BRK10		LHF	L6000	PNT310	325RN
TR-200	AA480	BRK10			L6000	PNT310	325RN
TR-208	AA510*	BRK10			L6000	PNT310	325RN
TR-212	AA510	BRK10			L6000	PNT310	325RN
TR-300							
RK-EX	AA181	C845		RNHT	HEXWRENC		
SPIN-SPIN PNEUMATIC TOOLS							
RK-1500SS-Q	ARO	C350		SSG-801	AE-801		
RK-500SS-Q	ARO			SSG-802	AE-802		
RK-280SS	ARO			SSG-803	AE-803		
SPIN-PULL PNEUDRAULIC TOOLS							
TR-1000	RNPT751	P330	74200	MS50		PNT800A	140SP
TR-2000		P330		MS100	AE-40	PNT1000	150SP
RK-50SP	RNPT751	P803					

RIVETKING® RIVETNUT DESIGN CONSIDERATIONS

A. GRIP RANGE

Determining the length of the rivet is critical to insure the rivetnut will function as it was designed. If the rivetnut is applied over or under its intended grip range, it will not work properly. Be sure to accommodate for the "theoretical" grip versus the "actual" grip. While two pieces of sheet metal each are .055 thick, it doesn't necessarily mean that the actual grip will be .110. Burrs or bends in the sheet metal could affect the theoretical grip.

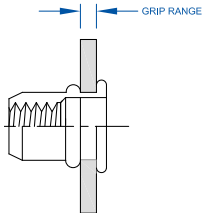

B. HOLE SIZE & SHAPE

The Rivetnut will only work if it is within the prescribed hole size. Additionally, the design engineer should calculate the manufacturing tolerances of the hole to insure proper fit so that interference issues will not surface at a later time. Holes should be round for round body rivet nuts, and hex for hex body rivet nuts. Oval, Square or out-of-round shapes require a rivetnut to be custom produced.

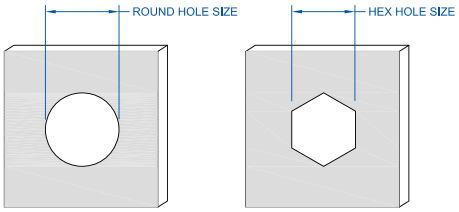

CLEARANCES

This is one of the most common oversights occurring in product designs.

C. TOOL CLEARANCE

Sufficient clearances (above the hole) for which the rivet will go through so that riveting equipment can sufficiently access the hole to be riveted without interference. Be sure to select the riveting equipment in the design phase to prevent the need for customized and potentially costly tooling modifications.

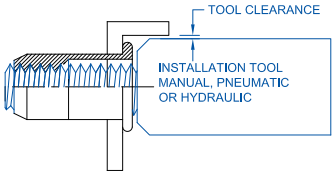

D. HEAD CLEARANCE

Axial access is required on the primary sheet to be riveted to allow for the flange to overlap the hole without interference. When designing the primary hole, make sure to calculate the head diameter and its tolerances and layout the foot print of the head on the hole. This is especially critical when riveting on brackets, near other hardware, or next to bends, folds, extrusions and/or cutouts on the sheet metal.

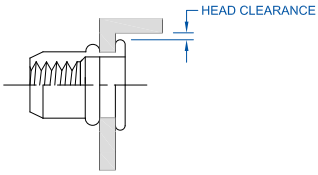

E. BLIND SIDE CLEARANCE

Since the blind side of the rivet nut is designed to form into a secondary flanged bearing surface, it is important to leave room for the flange to expand and to seat properly. Additionally, the collapsed height is shorter then the height before installation. Make sure the backside can accommodate the entire rivet before riveting. Testing should be done in the design phase to calculate what distances are needed.

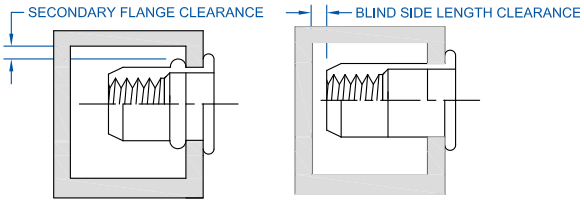

GALVANIC ACTION

Galvanic action is seldom considered in design but can often be one of the hidden causes of failures. Galvanic corrosion is accelerated electromechanical corrosion produced hen a noble metal is in contact with another less noble metal, both being in corroding medium (such as damp air). The less-noble metal corrodes at faster rate than normal while the noble metal acquires greater corrosion protection. For an example, an aluminum (less-noble metal) rivet in copper (more--noble metal) would cause aluminum to corrode at an accelerated rate while the copper would be virtually unattacked. Should you be in a position of having to join two dissimilar metals, be sure to consult the galvanic series table.

CORROSION PROTECTION

The corrosion factor of a particular rivet is dependent on the corrosivity of the base metal, the protection layer (plating), and the conversion layer (chromate). Being that the most cost effective material to produce is steel, most prefer to protect the steel with a plating such as Zinc and a chromate. Rivetnuts require a specialized plating & wax therefore it is highly suggested the manufacturer perform this task. Do not attempt to reprocess rivetnuts! For standard performance a SST rating (salt spray test) is about 48 hours until Red Rust. Other platings such as Zinc alloy's (ZiNi, ZnFe, ZnTi) that are available which can extend the SST rating to 840 hours until red rust. Be sure the plating is tested by the manufacturer per ASTM B117 standard and that the manufacturers' lab is proficiency tested semi-annually.

IKF SERIES® LOW PROFILE HEAD - KNURLED BODY

THINWALL AMERICAN STANDARD RIVETNUTS

The RivetKing IKF Series is a thinwall Rivetnut with a low profile head. Its design is such that spin/spin tools can easily collapse and properly set the rivet nut. The low profile head is nearly flush and offers greater bearing surface compared with IKR series. Spin-Spin or Spin-Pull tools can be used to apply IKF series rivetnuts.

ROHS COMPLIANT

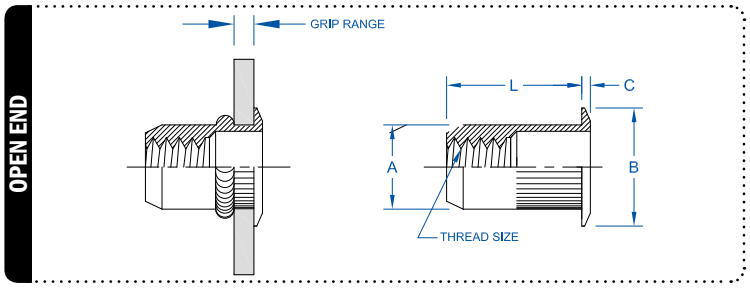

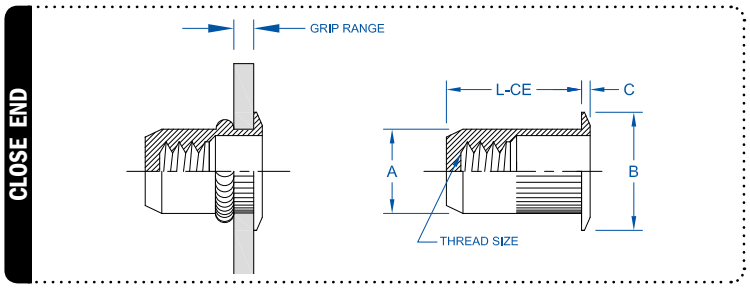

INCH

PART CODE	THREAD SIZE	GRIP CODE	GRIP RANGE	L LENGTH +/-.015	L-CE LENGTH +/-.015	B HEAD DIA +/- .010	C HEAD HT +/-.003	A BODY DIA MAX	HOLE SIZE +.006/-.000
6C1IKF	6-32 UNC	#1	.020 - .080	.420	.740	.390	.030	.265	.266
6C2IKF	6-32 UNC	#2	.080 - .130	.470	.740	.390	.030	.265	.266
8C1IKF	8-32 UNC	#1	.020 - .080	.420	.740	.390	.030	.265	.266
8C2IKF	8-32 UNC	#2	.080 - .130	.470	.740	.390	.030	.265	.266
10C1IKF	10-24 UNC	#1	.020 - .130	.475	.990	.415	.030	.296	.297
10C2IKF	10-24 UNC	#2	.130 - .225	.585	.990	.415	.030	.296	.297
10F1IKF	10-32 UNF	#1	.020 - .130	.475	.990	.415	.030	.296	.297
10F2IKF	10-32 UNF	#2	.130 - .225	.585	.990	.415	.030	.296	.297
25C1IKF	1/4-20 UNC	#1	.027 - .165	.580	1.190	.500	.030	.390	.391
25C2IKF	1/4-20 UNC	#2	.165 - .260	.680	1.190	.500	.030	.390	.391
25F1IKF	1/4-28 UNF	#1	.027 - .165	.580	1.190	.500	.030	.390	.391
25F2IKF	1/4-28 UNF	#2	.165 - .260	.680	1.190	.500	.030	.390	.391
31C1IKF	5/16-18 UNC	#1	.027 - .150	.690	1.390	.685	.035	.530	.531
31C2IKF	5/16-18 UNC	#2	.150 - .312	.805	1.390	.685	.035	.530	.531
31F1IKF	5/16-24 UNF	#1	.027 - .150	.690	1.390	.685	.035	.530	.531
31F2IKF	5/16-24 UNF	#2	.150 - .312	.805	1.390	.685	.035	.530	.531
37C1IKF	3/8-16 UNC	#1	.027 - .150	.690	1.390	.685	.035	.530	.531
37C2IKF	3/8-16 UNC	#2	.150 - .312	.805	1.390	.685	.035	.530	.531
37F1IKF	3/8-24 UNC	#1	.027 - .150	.690	1.390	.685	.035	.530	.531
37F2IKF	3/8-24 UNC	#2	.150 - .312	.805	1.390	.685	.035	.530	.531
50C1IKF	1/2-13 UNC	#1	.062 - .200	1.150	2.365	.865	.047	.685	.687
50C2IKF	1/2-13 UNC	#2	.200 - .350	1.300	2.365	.865	.047	.685	.687
50C3IKF	1/2-13 UNC	#3	.350 - .500	1.450	2.365	.865	.047	.685	.687

THE PART NUMBER IS COMPLETE BY ADDING THE MATERIAL AND FINISH CODES AS A SUFFIX TO THE PART CODE:

MATERIAL/FINISH CODES:
- SY = STEEL, ZINC YELLOW ROHS ∓
- SZ = STEEL, ZINC CLEAR ROHS
- SC = STEEL, CAD YELLOW PLATED
- AP = ALUMINUM, PLAIN ∓
- 3P = 18-8 STAINLESS STEEL, PLAIN ∓

EXAMPLE:
Part Code 6C1IKF in Steel,
Zinc Yellow Plating is... 6C1IKFSY

∓ Indicates stocked configurations

IKR SERIES® REDUCED HEAD - KNURLED BODY

THINWALL AMERICAN STANDARD RIVETNUTS

The RivetKing IKR Series is a a thinwall Rivetnut with a reduced head head. Its design is such that spin/spin tools can easily collapse and properly set the rivet nut. The reduced head provides for a completely flush installation in the sheet metal. Spin-Spin or Spin-Pull tools can be used to apply IKF series rivetnuts.

ROHS COMPLIANT

OPEN END

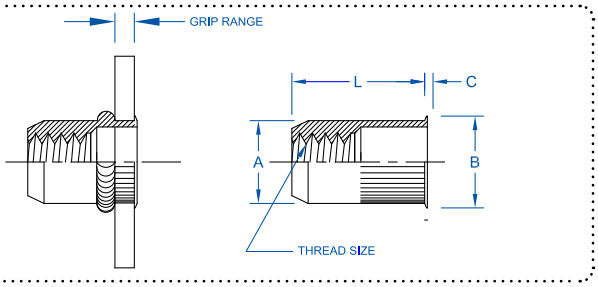

CLOSE END

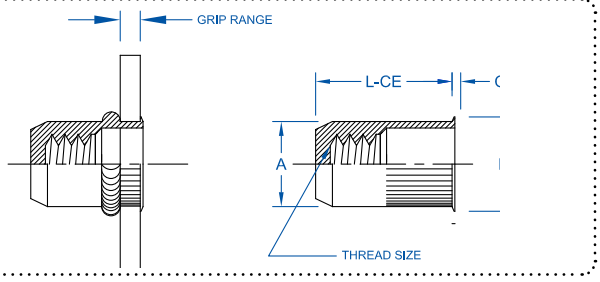

INCH

PART CODE	THREAD SIZE	GRIP CODE	GRIP RANGE	L LENGTH +/-.015	L-CE LENGTH +/-.015	B HEAD DIA +/- .010	C HEAD HT +/-.003	A BODY DIA MAX	HOLE SIZE +.006/-.000
6C1IKR	6-32 UNC	#1	.020 - .080	.420	.740	.310	.019	.265	.266
6C2IKR	6-32 UNC	#2	.080 - .130	.470	.740	.310	.019	.265	.266
8C1IKR	8-32 UNC	#1	.020 - .080	.420	.740	.310	.019	.265	.266
8C2IKR	8-32 UNC	#2	.080 - .130	.470	.740	.310	.019	.265	.266
10C1IKR	10-24 UNC	#1	.020 - .130	.475	.990	.340	.019	.296	.297
10C2IKR	10-24 UNC	#2	.130 - .225	.585	.990	.340	.019	.296	.297
10F1IKR	10-32 UNF	#1	.020 - .130	.475	.990	.340	.019	.296	.297
10F2IKR	10-32 UNF	#2	.130 - .225	.585	.990	.340	.019	.296	.297
25C1IKR	1/4-20 UNC	#1	.027 - .165	.580	1.190	.455	.022	.390	.391
25C2IKR	1/4-20 UNC	#2	.165 - .260	.680	1.190	.455	.022	.390	.391
25F1IKR	1/4-28 UNF	#1	.027 - .165	.580	1.190	.455	.022	.390	.391
25F2IKR	1/4-28 UNF	#2	.165 - .260	.680	1.190	.455	.022	.390	.391
31C1IKR	5/16-18 UNC	#1	.027 - .150	.690	1.390	.595	.022	.530	.531
31C2IKR	5/16-18 UNC	#2	.150 - .312	.805	1.390	.595	.022	.530	.531
31F1IKR	5/16-24 UNF	#1	.027 - .150	.690	1.390	.595	.022	.530	.531
31F2IKR	5/16-24 UNF	#2	.150 - .312	.805	1.390	.595	.022	.530	.531
37C1IKR	3/8-16 UNC	#1	.027 - .150	.690	1.390	.595	.022	.530	.531
37C2IKR	3/8-16 UNC	#2	.150 - .312	.805	1.390	.595	.022	.530	.531
37F1IKR	3/8-24 UNF	#1	.027 - .150	.690	1.390	.595	.022	.530	.531
37F2IKR	3/8-24 UNF	#2	.150 - .312	.805	1.390	.595	.022	.530	.531

THE PART NUMBER IS COMPLETE BY ADDING THE MATERIAL AND FINISH CODES AS A SUFFIX TO THE PART CODE:

MATERIAL/FINISH CODES:
SY = STEEL, ZINC YELLOW ROHS ₮
SZ = STEEL, ZINC CLEAR ROHS
SC = STEEL, CAD YELLOW PLATED
AP = ALUMINUM, PLAIN ₮
3P = 18-8 STAINLESS STEEL, PLAIN ₮

EXAMPLE:
Part Code 6C1ISR in Steel,
Zinc Yellow Plating is... 6C1ISRSY

₮ Indicates stocked configurations

IRL SERIES™ LARGE HEAD · HEAVY DUTY · SMOOTH BODY

THICKWALL AMERICAN STANDARD RIVETNUTS • FOR HEAVY DUTY APPLICATIONS

ROHS COMPLIANT

The RivetKing IRL Series is a heavywall/thickwall Rivetnut. This robust design upgrades the thickness of both the body and the head height. The robust IRL series offers higher pullout resistance and increased endurance of the joint and assembly. Spin-Pull tools are recommended for installation of IRL series rivetnuts.

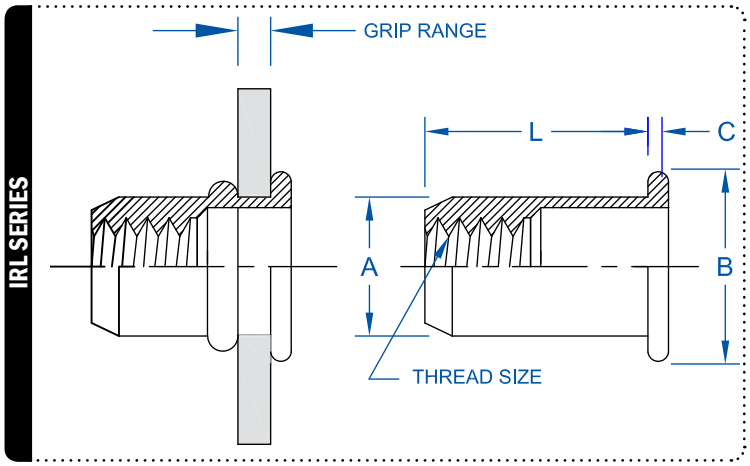

PART CODE	THREAD SIZE (INCH)	GRIP CODE	GRIP RANGE	LENGTH +/-.015	HEAD DIA +/-.015	HEAD HEIGHT NOMINAL	BODY DIA. +.000/-.004	HOLE SIZE +.003/-.000
4C1IRL	4-40 UNC	#1	.010 - .060	.345	.270	.025	.155	.155
4C2IRL	4-40 UNC	#2	.060 - .085	.370	.270	.025	.155	.155
4C3IRL	4-40 UNC	#3	.085 - .110	.400	.270	.025	.155	.155
6C1IRL	6-32 UNC	#1	.010 - .075	.438	.325	.032	.189	.189
6C2IRL	6-32 UNC	#2	.075 - .120	.500	.325	.032	.189	.189
6C3IRL	6-32 UNC	#3	.120 - .160	.500	.325	.032	.189	.189
8C1IRL	8-32 UNC	#1	.010 - .075	.438	.357	.032	.221	.221
8C2IRL	8-32 UNC	#2	.075 - .120	.500	.357	.032	.221	.221
8C3IRL	8-32 UNC	#3	.120 - .160	.500	.357	.032	.221	.221
10C1IRL	10-24 UNC	#1	.010 - .080	.531	.406	.038	.250	.250
10C2IRL	10-24 UNC	#2	.080 - .130	.594	.406	.038	.250	.250
10C3IRL	10-24 UNC	#3	.130 - .180	.641	.406	.038	.250	.250
10F1IRL	10-32 UNF	#1	.010 - .080	.531	.406	.038	.250	.250
10F2IRL	10-32 UNF	#2	.080 - .130	.594	.406	.038	.250	.250
10F3IRL	10-32 UNF	#3	.130 - .180	.641	.406	.038	.250	.250
25C1IRL	1/4-20 UNC	#1	.020 - .080	.625	.475	.058	.332	.332
25C2IRL	1/4-20 UNC	#2	.080 - .140	.687	.475	.058	.332	.332
25C3IRL	1/4-20 UNC	#3	.140 - .200	.750	.475	.058	.332	.332
31C1IRL	5/16-18 UNC	#1	.030 - .125	.750	.665	.062	.413	.413
31C2IRL	5/16-18 UNC	#2	.125 - .200	.875	.665	.062	.413	.413
31C3IRL	5/16-18 UNC	#3	.200 - .275	.937	.665	.062	.413	.413
37C1IRL	3/8-16 UNC	#1	.030 - .125	.844	.781	.088	.490	.490
37C2IRL	3/8-16 UNC	#2	.125 - .200	.938	.781	.088	.490	.490
37C3IRL	3/8-16 UNC	#3	.200 - .275	1.031	.781	.088	.490	.490
50C1IRL	1/2-13 UNC	#1	.050 - .150	.906	.906	.085	.625	.625
50C2IRL	1/2-13 UNC	#2	.150 - .250	1.031	.906	.085	.625	.625
50C3IRL	1/2-13 UNC	#3	.250 - .350	1.141	.906	.085	.625	.625

THE PART NUMBER IS COMPLETE BY ADDING THE MATERIAL AND FINISH CODES AS A SUFFIX TO THE PART CODE:

MATERIAL/FINISH CODES:
- SY = STEEL, ZINC YELLOW ROHS ₮
- SZ = STEEL, ZINC CLEAR ROHS
- SC = STEEL, CAD YELLOW PLATED
- AP = ALUMINUM, PLAIN ₮
- 3P = 18-8 STAINLESS STEEL, PLAIN ₮

EXAMPLE:
Part Code 6C1IRL in Steel,
Zinc Yellow Plating is... 6C1IRLSZ

₮ Indicates stocked configurations

IRR SERIES™ REDUCED HEAD · SMOOTH BODY

THINWALL AMERICAN STANDARD RIVET NUTS • FOR STANDARD HOLE SIZES

ROHS COMPLIANT

The RivetKing IRR Series is a thinwall insert that has been designed specifically for convenience. Often the holes of hardware are pre-drilled or pre-punched to a standard hole size. This may cause difficulties with traditional rivetnuts which require an off-standard hole diameter. The IRR series have been produced to fit in common hole sizes that may be found in pre-designed hardware and assemblies.

IRR SERIES

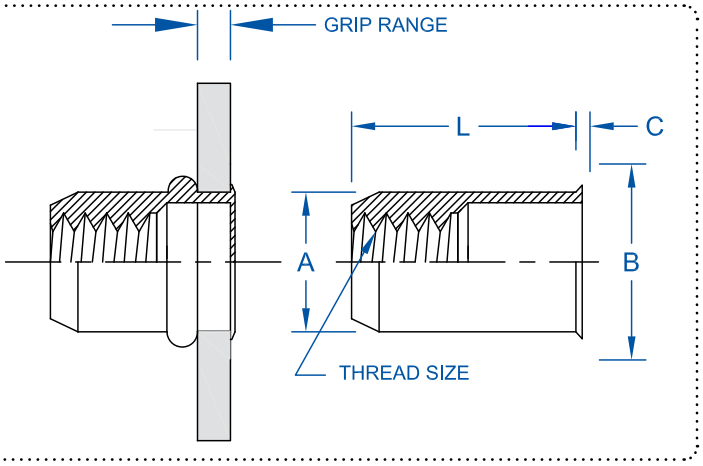

	PART NUMBER	THREAD SIZE (INCH)	GRIP RANGE	LENGTH +/-.015	HEAD DIA +/- .010	HEAD HEIGHT +/-.003	BODY DIA. MAX.	HOLE SIZE +.006/-.000
INCH	6C1IRR	6-32 UNC	.020-.080	.385	.295	.018	.249	.250
	8C1IRR	8.32 UNC	.020-.080	.385	.295	.018	.249	.250
	10C1IRR	10-24 UNC	.020-.130	.440	.320	.020	.280	.281
	10F1IRR	10-32 UNC	.020-.130	.440	.320	.020	.280	.281
	25C1IRR	1/4-20 UNC	.030-.165	.580	.425	.022	.374	.375
	25F1IRR	1/4-28 UNF	.030-.165	.580	.425	.022	.374	.375
	31C1IRR	5/16-18 UNC	.040-.200	.690	.560	.022	.499	.500
	31F1IRR	5/16-24 UNF	.040-.200	.690	.560	.022	.499	.500
	37C1IRR	3/8-16 UNC	.040-.200	.690	.560	.022	.499	.500
	37F1IRR	3/8-24 UNF	.040-.200	.690	.560	.022	.499	.500

	PART NUMBER	THREAD SIZE (METRIC)	GRIP RANGE	LENGTH +/-.4	HEAD DIA +/- .25	HEAD HEIGHT +/-.1	BODY DIA. MAX.	HOLE SIZE +.05/-0
METRIC	.30C1IRR	M3	0.50 - 1.50	8.70	5.40	0.30	4.92	5.10
	.40C1IRR	M4	0.50 - 2.00	10.40	6.70	0.30	6.30	6.40
	.50C1IRR	M5	0.50 - 3.00	11.50	7.90	0.40	7.10	7.20
	.60C1IRR	M6	0.70 - 3.00	14.50	10.20	0.40	9.50	9.60
	.80C1IRR	M8	0.80 - 4.50	16.00	11.30	0.40	10.50	10.60

THE PART NUMBER IS COMPLETE BY ADDING THE MATERIAL AND FINISH CODES AS A SUFFIX TO THE PART CODE:

MATERIAL/FINISH CODES:
SY = STEEL, ZINC YELLOW ROHS ∓
SZ = STEEL, ZINC CLEAR ROHS
SC = STEEL, CAD YELLOW PLATED
AP = ALUMINUM, PLAIN ∓
3P = 18-8 STAINLESS STEEL, PLAIN ∓

EXAMPLE:
Part Code 6C1IRL in Steel,
Zinc Yellow Plating is... 6C1IRLSZ

∓ Indicates stocked configurations

IPB & IPN SERIES™ QUADRAFOLD™ RIVETNUT

PRE-BULBED & STRAIGHT SHANK QUAD FOLDING RIVETNUTS

IPB SERIES - PRE-BULBED

IPN SERIES - STRAIGHT SHANK

ROHS COMPLIANT

IPB & IPN SERIES

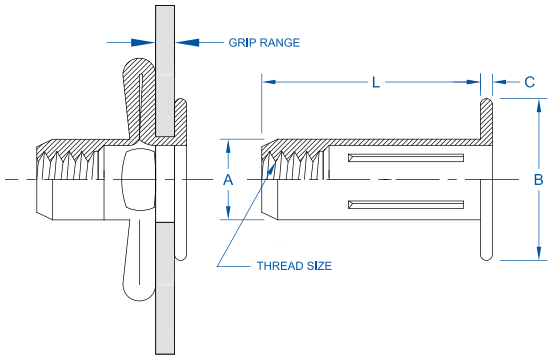

The RivetKing IPB and IPN Series Rivetnuts do what traditional rivet nuts cannot. This series is designed for soft materials such as plastics, fiberglass and thin sheet metal where increased pullout resistance is required. The fastener performance is dictated by the four folding tines that are extended during the riveting process. The result is an upset of metal that is nearly three times the diameter of the hole. This series is offered in both pre-bulbed & straight shank versions. The pre-bulbed version is designed to work with spin-spin tools, while the straight shank version is designed to work with spin-pull tools only.

	PART CODE (PRE-BULBED)	PART CODE (STRAIGHT SHANK)	THREAD SIZE (INCH)	GRIP CODE	GRIP RANGE	LENGTH MAX.	HEAD DIAMETER MAX.	HEAD HEIGHT +/-.005	BODY DIAMETER MAX.	HOLE SIZE +.006/-.000
INCH	10C1IPB	10C1IPN*	10-24 UNC	#1	.020 - .175	.843	.510	.038	.329 (.272)*	.336 (.273)*
	10C2IPB	10C2IPN*	10-24 UNC	#2	.175 - .320	.936	.510	.038	.329 (.272)*	.336 (.273)*
	10F1IPB	10F1IPN*	10-32 UNF	#1	.020 - .175	.843	.510	.038	.329 (.272)*	.336 (.273)*
	10F2IPB	10F2IPN*	10-32 UNF	#2	.175 - .320	.936	.510	.038	.329 (.272)*	.336 (.273)*
	25C1IPB	25C1IPN*	1/4-20 UNC	#1	.020 - .280	1.015	.645	.059	.382 (.346)*	.390 (.347)*
	25C2IPB	25C2IPN*	1/4-20 UNC	#2	.280 - .500	1.249	.645	.059	.382 (.346)*	.390 (.347)*
	31C1IPB	31C1IPN*	5/16-18 UNC	#1	.020 - .280	1.156	.770	.062	.495 (.437)*	.500 (.438)*
	31C2IPB	31C2IPN*	5/16-18 UNC	#2	.280 - .500	1.390	.770	.062	.495 (.437)*	.500 (.438)*

	PART CODE (PRE-BULBED)	PART CODE (STRAIGHT SHANK)	THREAD SIZE (INCH)	GRIP CODE	GRIP RANGE	LENGTH MAX.	HEAD DIAMETER MAX.	HEAD HEIGHT +/- 0.13	BODY DIAMETER MAX.	HOLE SIZE +0.15/-.000
METRIC	.50C1IPB	.50C1IPN*	M5	#1	0.50 - 4.45	21.41	12.95	0.96	8.35 (7.47)*	8.55 (7.48)*
	.50C2IPB	.50C2IPN*	M5	#2	4.45 - 8.10	24.18	12.95	0.96	8.35 (7.47)*	8.55 (7.48)*
	.60C1IPB	.60C1IPN*	M6	#1	0.50 - 7.10	25.78	16.38	1.50	9.70 (8.79)*	10.00 (8.80)*
	.60C2IPB	.60C2IPN*	M6	#2	7.10 - 12.70	31.70	16.38	1.50	9.70 (.8.79)*	10.00 (8.80)*
	.80C1IPB	.80C1IPN*	M8	#1	0.50 - 7.10	29.33	19.65	1.57	12.57 (11.10)*	12.70 (11.11)*
	.80C2IPB	.80C2IPN*	M8	#2	7.10 - 12.70	35.28	19.65	1.57	12.57 (11.10)*	12.70 (11.11)*

THE PART NUMBER IS COMPLETE BY ADDING THE MATERIAL AND FINISH CODES AS A SUFFIX TO THE PART CODE:

MATERIAL/FINISH CODES:
SY = STEEL, ZINC YELLOW ROHS ₮
SZ = STEEL, ZINC CLEAR ROHS
SC = STEEL, CAD YELLOW PLATED
SZN = STEEL, ZINC NICKEL 800 HOURS

EXAMPLE:
Part Code 6C1IPB in Steel,
Zinc Yellow Plating is... 6C1IPBSY

₮ Indicates stocked configurations

JK SERIES™ JK NUT

AMERICAN STANDARD

The RivetKing JK Series, JK Nut is a low cost alternative to IPB Series in non-load bearing applications. Ideal applications for JK Nuts are when they can be applied to paperboard, cardboard, or thin plastics. For weather resistance, the JK nuts can be coated in vinyl in any color.

JK NUT

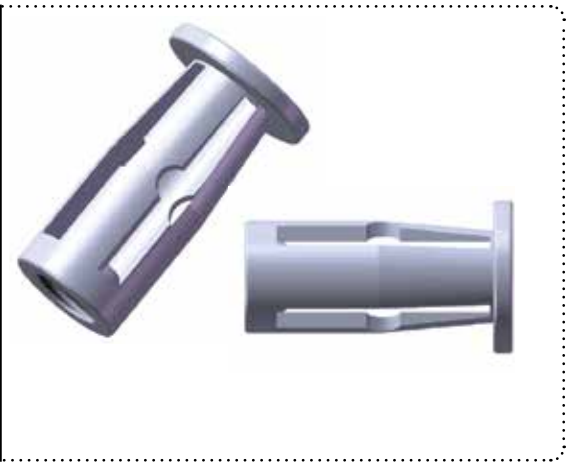

	PART CODE	THREAD SIZE (INCH)	GRIP CODE	GRIP RANGE	LENGTH REF.	HEAD DIAMETER REF.	HEAD HEIGHT REF.	BODY DIAMETER REF.	HOLE SIZE +/-.006 +/-.009*
INCH	JK-0401	6-32 UNC	#1	.010 - .060	.663	.469	.073	.308	.324
	JK-0402	6-32 UNC	#2	.060 - .085	.900	.469	.073	.308	.324
	JK-0501	10-24 UNC	#1	.075 - .120	.703	.531	.073	.378	.391*
	JK-0502	10-24 UNC	#2	.120 - .160	.875	.531	.073	.378	.391*
	JK-0601	1/4-20 UNC	#1	.010 - .075	.718	.625	.073	.438	.444
	JK-0602	1/4-20 UNC	#2	.250 - .350	.906	.625	.073	.438	.444

	PART CODE	THREAD SIZE (INCH)	GRIP CODE	GRIP RANGE	LENGTH REF.	HEAD DIAMETER REF.	HEAD HEIGHT REF.	BODY DIAMETER REF.	HOLE SIZE +/-0.15 +/-0.24*
METRIC	JK-0401M	M4	#1	3.81 - 4.75	16.84	11.91	1.85	8.08	8.23
	JK-0402M	M4	#2	4.75 - 9.53	22.86	12.91	1.85	8.08	8.23
	JK-0501M	M5	#1	3.81 - 4.75	17.86	13.49	1.85	9.70	9.94*
	JK-0502M	M5	#2	4.75 - 9.53	22.23	13.49	1.85	9.70	9.94+
	JK-0601M	M6	#1	3.81 - 4.75	18.24	15.89	1.85	11.13	11.28
	JK-0602M	M6	#2	4.75 - 9.53	23.01	15.89	1.85	11.13	11.28

THE PART NUMBER IS COMPLETE BY ADDING THE MATERIAL AND FINISH CODES AS A SUFFIX TO THE PART CODE:

MATERIAL/FINISH CODES: NO SUFFIX = STEEL, ZINC CLEAR ROHS ₮
BP = BRASS, PLAIN

EXAMPLE:
Part Code JK-0401 in Steel,
Zinc Clear Plating is... JK-0401

₮ Indicates stocked configurations

JF SERIES™ RUBBER NUT

AMERICAN STANDARD

The RivetKing JF Series Rubber Nut are used as a removable rivetnut. Installation is performed with the bolt or screw itself. To remove the rivet nut, just remove the bolt or screw. Rubnuts can also be used as vibration isolators to prevent the rattle and pullout. Typical applications are for the installation of mirrors or other hardware in utility trucks, compressors, and engines.

RUBBER NUT

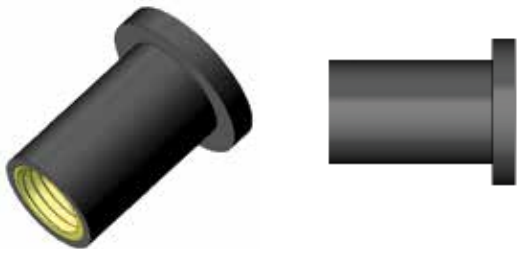

PART CODE	THREAD SIZE (INCH)	GRIP CODE	GRIP RANGE	LENGTH REF.	HEAD DIAMETER REF.	HEAD HEIGHT REF.	BODY DIAMETER REF.	HOLE SIZE +.002/-.000
JF-3100	6-32 UNC	#1	.015 - .156	.499	.452	.062	.312	.312
JF-3250	6-32 UNC	#2	.375 - .607	.981	.554	.035	.240	.250
JF-4100	8-32 UNC	#1	.015 - .156	.499	.438	.052	.312	.312
JF-4140	8-32 UNC	#2	.015 - .172	.560	.750	.060	.312	.312
JF-5150	10-32 UNF	#1	.015 - .192	.554	.500	.036	.377	.377
JF-5170	10-32 UNF	#2	.035 - .232	.665	.562	.040	.377	.377
JF-5190	10-32 UNF	#3	.030 - .227	.807	.750	.187	.377	.377
JF-5250	1/4-20 UNC	#1	.015 - .111	.630	.630	.051	.500	.500
JF-6200	1/4-20 UNC	#2	.031 - .187	.831	.740	.187	.500	.500
JF-6250	1/4-20 UNC	#3	.250 - .457	1.051	.635	.051	.500	.500
JF-8200	5/16-18 UNC	#1	.016 - .156	.725	.875	.125	.562	.562
JF-8250	5/16-18 UNC	#2	.156 - .375	1.100	.875	.225	.562	.562
JF-1027	3/8-16 UNC	#2	.015 - .437	1.062	1.250	.187	.750	.750

PART CODE	THREAD SIZE (INCH)	GRIP CODE	GRIP RANGE	LENGTH REF.	HEAD DIAMETER REF.	HEAD HEIGHT REF.	BODY DIAMETER REF.	HOLE SIZE +.002/-.000
JF-3100M	M3-0.5	#1	0.40 - 4.00	12.60	11.00	1.40	7.90	7.90
JF-3250M	M3-0.5	#2	9.50 - 15.40	24.90	14.00	0.90	6.10	6.10
JF-4100M	M4-0.7	#1	0.40 - 4.00	12.60	11.00	1.40	7.90	7.90
JF-4140M	M4-0.7	#2	0.40 - 4.40	14.20	19.05	1.50	7.90	7.90
JF-5150M	M5-0.8	#1	0.40 - 4.90	14.10	12.70	0.90	9.60	9.60
JF-5170M	M5-0.8	#2	0.85 - 5.90	17.00	14.00	1.00	9.60	9.60
JF-5190M	M5-0.8	#3	0.80 - 5.80	20.95	18.95	4.40	9.60	9.60
JF-5250M	M5-0.8	#1	7.90 - 16.00	26.50	14.00	1.30	9.60	9.60
JF-6200M	M6-1.0	#2	0.80 - 4.70	21.10	19.05	4.75	12.70	12.70
JF-6250M	M6-1.0	#3	6.40 - 11.50	26.70	16.30	2.00	12.70	12.70
JF-8200M	M8-1.25	#1	0.40 - 4.00	18.30	21.50	3.20	15.90	15.90
JF-8250M	M8-1.25	#2	3.95 - 9.50	27.90	21.50	5.70	15.90	15.90
JF-1027M	M10-1.5	#2	0.38 - 11.10	27.00	29.50	4.75	19.05	19.05

THE PART NUMBER IS COMPLETE BY ADDING THE MATERIAL AND FINISH CODES AS A SUFFIX TO THE PART CODE:

MATERIAL/FINISH CODES:
NO SUFFIX = BRASS/EPDM ₮
BE = BRASS/EPDM
3N = STAINLESS/NEOPRENE
3E = STAINLESS/EPDM

EXAMPLE:
Part Code JF-3100 in
Brass/Neoprene is... JK-0401

₮ Indicates stocked configurations

ISR & ISN SWAGING SERIES™

AMERICAN STANDARD RIVETNUTS • FOR BLIND HOLES OR LARGE GRIP RANGE

The RivetKing ISN/ISR Series has the grip range that most rivetnuts lack. It has an unlimited maximum grip range which will work in all thickness above .030 (ISR Series) and .062 (ISN Series). The ISR series is designed for use in any metal, while the ISN series is designed for use in any material softer then itself such as plastics, fiberglass, and plywood.

ISR SWAGING SERIES™ STRAIGHT KNURL - FOR METALS

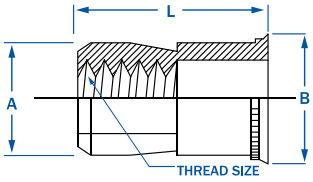

ROHS COMPLIANT

PART CODE	THREAD SIZE	HEAD DIA +/- .005	LENGTH +/-.015	BODY DIA. MAX.	RECOMMENDED HOLE SIZE MATERIAL THICKNESS .030-.090	MATERIAL THICKNESS .091-.124	MATERIAL THICKNESS .125-.186	MATERIAL THICKNESS .187- OVER
4C1ISR	4-40 UNC	0.211	0.370	0.1875	0.1875	0.1935	0.1935	0.1960
6C1ISR	6-32 UNC	0.240	0.370	0.2185	0.2188	0.2210	0.2280	0.2280
8C1ISR	8-32 UNC	0.269	0.370	0.2495	0.2500	0.2570	0.2656	0.2656
10C1ISR	10-24 UNC	0.306	0.370	0.2805	0.2812	0.2900	0.2900	0.2969
10F1ISR	10-32 UNF	0.306	0.370	0.2805	0.2812	0.2900	0.2900	0.2969
25C1ISR	1/4-20 UNC	0.400	0.515	0.3745	0.3750	0.3750	0.3860	0.3906
31C1ISR	5/16-18 UNC	0.528	0.615	0.4995	0.5000	0.5000	0.5156	0.5156
37C1ISR	3/8-16 UNC	0.588	0.745	0.5165	0.5625	0.5625	0.5781	0.5781
50C1ISR	1/2-13 UNC	0.800	0.935	0.7485	0.7500	0.7656	0.7810	0.7970

ISN SWAGING SERIES™ DIAMOND KNURL - FOR PLASTICS / SOFT MATERIALS

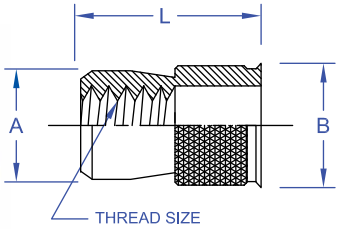

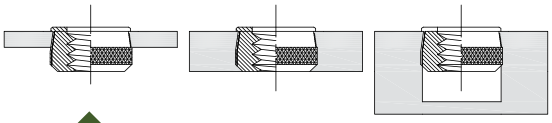

ROHS COMPLIANT

PART CODE	THREAD SIZE	HEAD DIA +/-.005	LENGTH +/-.015	BODY DIA MAX.	HOLE SIZE +.005/-.000	MATERIAL THICKNESS
6C1ISN	6-32 UNC	0.255	0.370	0.233	0.234	.062 MIN.
8C1ISN	8-32 UNC	0.285	0.370	0.264	0.266	.062 MIN.
10C1ISN	10-24 UNC	0.320	0.370	0.295	0.297	.062 MIN.
10F1ISN	10-32 UNF	0.320	0.370	0.295	0.297	.062 MIN.
25C1ISN	1/4-20 UNC	0.415	0.515	0.389	0.391	.062 MIN.
31C1ISN	5/16-18 UNC	0.550	0.615	0.528	0.531	.062 MIN.
37C1ISN	3/8-16 UNC	0.615	0.740	0.590	0.594	.062 MIN.

THE PART NUMBER IS COMPLETE BY ADDING THE MATERIAL AND FINISH CODES AS A SUFFIX TO THE PART CODE:

MATERIAL/FINISH CODES:
SC1 = STEEL, CAD CLEAR PLATED
SC2 = STEEL, CAD YELLOW PLATED
ST = STEEL, TIN PLATED ROHS
BP = BRASS, PLAIN FINISH

EXAMPLE:
Part Code 6C1ISN in Steel,
Tin ROHS Plating is... 6C1ISNST

IHF SERIES™ HALF HEX BODY - LOW PROFILE HEAD

THINWALL AMERICAN STANDARD RIVETNUTS • FOR USE WITH SPIN-SPIN TOOLS

ROHS COMPLIANT

The RivetKing IHF Series is a thinwall half hex insert for use in hexagon holes. The half hex thinwall rivetnut is designed for use with spin-spin tools. The torque to set is far less then the full hex heavy wall inserts. The low profile head is wide and thin and allows for a near flush installation. Spin-Spin or Spin-Pull tools can be used to set the IHF series.

IHF SERIES

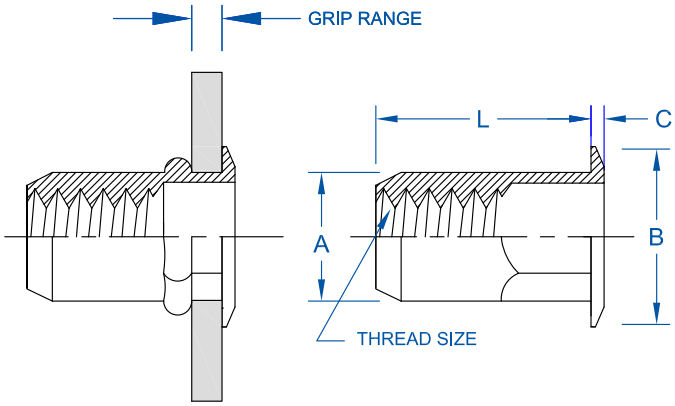

PART CODE	THREAD SIZE (INCH)	GRIP CODE	GRIP RANGE	LENGTH +/-.015	HEAD DIA +/-.010 +/-.025*	HEAD HEIGHT +/-.003	BODY DIA. MAX	HEX HOLE SIZE (ACROSS FLATS) +.004/-.000
6C1IHF	6-32 UNC	#1	.020-.080	.385	.375	.027	.249	.250
6C2IHF	6-32 UNC	#2	.080-.130	.435	.375	.027	.249	.250
8C1IHF	8-32 UNC	#1	.020-.080	.385	.375	.027	.249	.250
8C2IHF	8-32 UNC	#2	.080-.130	.435	.375	.027	.249	.250
10C1IHF	10-24 UNC	#1	.020-.130	.435	.390	.027	.280	.281
10C2IHF	10-24 UNC	#2	.130-.225	.535	.390	.027	.280	.281
10F1IHF	10-32 UNF	#1	.020-.130	.435	.390	.027	.280	.281
10F2IHF	10-32 UNF	#2	.130-.225	.535	.390	.027	.280	.281
25C1IHF	1/4-20 UNC	#1	.027-.165	.585	.510	.030	.374	.375
25C2IHF	1/4-20 UNC	#2	.165-.260	.685	.510	.030	.374	.375
25F1IHF	1/4-28 UNF	#1	.027-.165	.585	.510	.030	.374	.375
25F2IHF	1/4-28 UNF	#2	.165-.260	.685	.510	.030	.374	.375
31C1IHF	5/16-18 UNC	#1	.027-.150	.685	.655*	.035	.499	.500
31C2IHF	5/16-18 UNC	#2	.150-.312	.845	.655*	.035	.499	.500
31F1IHF	5/16-24 UNF	#1	.027-.150	.685	.655*	.035	.499	.500
31F2IHF	5/16-24 UNF	#2	.150-.312	.845	.655*	.035	.499	.500
37C1IHF	3/8-16 UNC	#1	.027-.150	.685	.655*	.035	.499	.500
37C2IHF	3/8-16 UNC	#2	.150-.312	.845	.655*	.035	.499	.500
37F1IHF	3/8-24 UNF	#1	.027-.150	.685	.655*	.035	.499	.500
37F2IHF	3/8-24 UNF	#2	.150-.312	.845	.655*	.035	.499	.500

THE PART NUMBER IS COMPLETE BY ADDING THE MATERIAL AND FINISH CODES AS A SUFFIX TO THE PART CODE:

MATERIAL/FINISH CODES:
SZ = STEEL, ZINC CLEAR ROHS
SY = STEEL, ZINC YELLOW ROHS ₮
SC = STEEL, CAD YELLOW PLATED
ST = STEEL, TIN PLATED
BP = BRASS, PLAIN FINISH

EXAMPLE:
Part Code 6C1IRR in Steel,
Zinc Clear Plating is... 6C1IRRSY

₮ Indicates stocked configurations

EXPENDABLE (THROW AWAY)

RIVET NUT INSTALLATION TOOL

IRL SERIES

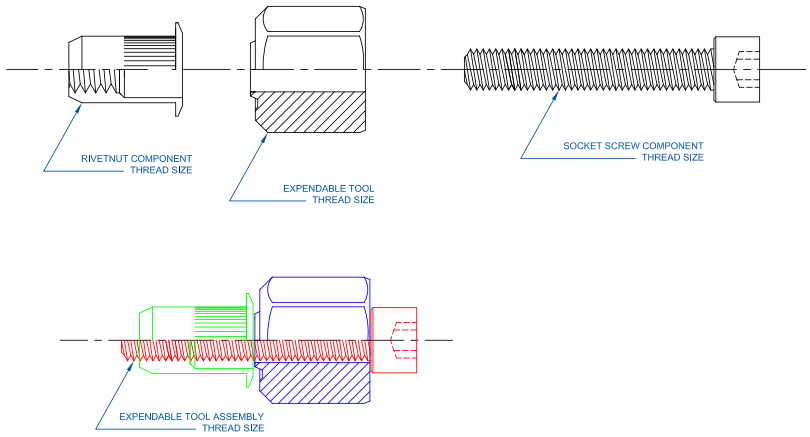

COMPLETE ASSEMBLY PART#	THREAD SIZE (INCH)	SCREW PART#	EXPENDABLE TOOL PART#	WRENCH SIZE	SOCKET SIZE
AA184-632	6-32 UNC	6C-KCS	AA184-3	9/16”	7/64”
AA184-832	8-32 UNC	8C-KCS	AA184-4	9/16”	9/64”
AA184-1024	10-24 UNC	10C-KCS	AA184-5	9/16”	5/32”
AA184-1032	10-32 UNF	10F-KCS	AA184-5	9/16”	5/32”
AA184-1420	1/4-20 UNC	25C-KCS	AA184-6	9/16”	3/16”
AA184-51618	5/16-18 UNC	31C-KCS	AA184-8	9/16”	1/4”
AA184-51624	5/16-24 UNF	31F-KCS	AA184-8	9/16”	1/4”
AA184-3816	3/8-16 UNC	37C-KCS	AA184-10	9/16”	5/16”
AA184-3824	3/8-24 UNF	37F-KCS	AA184-10	9/16”	5/16”
AA184-M3	M3	.30C-KCS	AA184-3	9/16”	2.5MM
AA184-M4	M4	.40C-KCS	AA184-4	9/16”	3.0MM
AA184-M5	M5	.50C-KCS	AA184-5	9/16”	4.00MM
AA184-M6	M6	.60C-KCS	AA184-6	9/16”	5.00MM
AA184-M8	M8	.80C-KCS	AA184-8	9/16”	6.00MM
AA184-M10	M10	.100C-LCS	AA184-10	9/16”	8.00MM

NKL SERIES™ KNURLED BODY - LARGE HEAD

EUROPEAN STANDARD RIVETNUTS • HEAVYWALL RIVETNUTS

The RivetKing NKL Series is a heavywall European Style Rivetnut. This robust design upgrades the thickness of both the body and the head height. The robust IRL series offers higher pullout resistance and increased endurance of the joint and assembly. The NIK series has a large head and a knurled body which resist spin out. Spin-Pull tools are recommended for installation of NIK series rivetnuts.

NKL SERIES

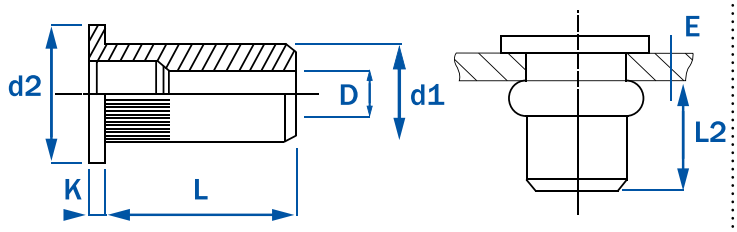

ROHS COMPLIANT

	PART CODE	THREAD SIZE (INCH)	GRIP CODE	GRIP RANGE	OVERALL LENGTH REF	HEAD DIA REF.	HEAD HEIGHT REF.	BODY DIA. REF.	HOLE SIZE +.000/-.004
INCH	6C1NKL	6-32 UNC	#1	.027 - .125	.445	.354	.032	.2335	.238
	8C1NKL	8-32 UNC	#1	.027 - .125	.445	.354	.032	.2335	.238
	8C2NKL	8-32 UNC	#2	.125 - .224	.551	.354	.032	.2335	.238
	10F1NKL	10-32 UNC	#1	.027 - .125	.543	.406	.038	.2715	.276
	10F2NKL	10-32 UNC	#2	.125 - .224	.650	.406	.038	.2715	.276
	25C1NKL	1/4-20 UNC	#1	.027 - .125	.594	.475	.057	.3315	.336
	25C2NKL	1/4-20 UNC	#2	.125 - .224	.701	.475	.057	.3315	.336
	31C1NKL	5/16-18 UNC	#1	.027 - .125	.744	.665	.062	.4125	.417
	31C2NKL	5/16-18 UNC	#2	.125 - .224	.850	.665	.062	.4125	.417
	37C1NKL	3/8-16 UNC	#1	.030 - .140	.906	.781	.088	.4915	.496
	37C2NKL	3/8-16 UNC	#2	.140 - .240	1.012	.781	.088	.4915	.496
	50C1NKL	1/2-13 UNC	#1	.039 - .157	1.063	.905	.088	.6285	.634

	PART CODE	THREAD SIZE (METRIC)	GRIP CODE	GRIP RANGE	LENGTH REF.	HEAD DIA REF.	HEAD HEIGHT REF.	BODY DIA. REF.	HOLE SIZE +.00/-.01
METRIC	.30C1NKL	M3	#1	0.25 - 2.00	9.75	7.50	1.00	5.00	5.10
	.40C1NKL	M4	#1	0.25 - 3.00	9.50	9.00	1.00	6.00	6.10
	.40C2NKL	M4	#2	3.00 - 4.50	12.25	9.00	1.00	6.00	6.10
	.50C1NKL	M5	#1	0.25 - 3.00	12.00	10.00	1.00	6.90	7.10
	.50C2NKL	M5	#2	3.00 - 5.50	15.00	10.00	1.00	6.90	7.10
	.60C1NKL	M6	#1	0.50 - 3.00	14.50	13.00	1.50	8.90	9.10
	.60C2NKL	M6	#2	3.00 - 5.50	16.50	13.00	1.50	8.90	9.10
	.80C1NKL	M8	#1	0.50 - 3.00	16.50	16.00	1.50	10.90	11.10
	.80C2NKL	M8	#2	3.00 - 5.50	18.50	16.00	1.50	10.90	11.10
	.100C1NKL	M10	#1	0.50 - 3.50	19.50	19.00	2.00	13.00	13.10
	.100C2NKL	M10	#2	3.50 - 6.00	21.50	19.00	2.00	13.00	13.10
	.120C1NKL	M12	#1	1.00 - 4.00	25.00	23.00	2.00	16.00	16.10

THE PART NUMBER IS COMPLETE BY ADDING THE MATERIAL AND FINISH CODES AS A SUFFIX TO THE PART CODE:

MATERIAL/FINISH CODES:
SY = STEEL, ZINC YELLOW ROHS
SZ = STEEL, ZINC CLEAR ROHS ∓
SC = STEEL, CAD YELLOW PLATED
SZN = STEEL, ZINC NICKEL 800 HOURS
BP = BRASS, PLAIN FINISH

EXAMPLE:
Part Code 6C1NKL in Steel,
Zinc Clear Plating is... 6C1NKLSZ

∓ Indicates stocked configurations

NKR SERIES™ KNURLED BODY - REDUCED HEAD

EUROPEAN STANDARD RIVETNUTS • HEAVYWALL RIVETNUTS

ROHS COMPLIANT

The RivetKing NKR Series is a heavywall European Style Rivetnut. This robust design upgrades the thickness of both the body. The NKR series offers higher pullout resistance and increased endurance of the joint and assembly. The NKR series has a reduced head and a knurled body which resist spin out. Spin-Pull tools are recommended for installation of NIK series rivetnuts.

NKR SERIES

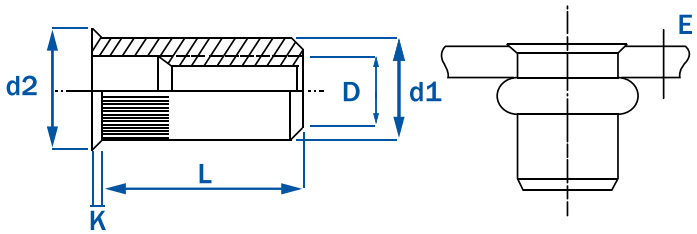

	PART CODE	THREAD SIZE (INCH)	GRIP CODE	GRIP RANGE	OVERALL LENGTH REF	HEAD DIA REF.	HEAD HEIGHT REF.	BODY DIA. REF.	HOLE SIZE +.000/-.004
INCH	6C1NKR	6-32 UNC	#1	.027 - .125	.445	.261	.012	.2335	.238
	8C1NKR	8-32 UNC	#1	.027 - .125	.445	.261	.012	.2335	.238
	8C2NKR	8-32 UNC	#2	.125 - .224	.551	.261	.012	.2335	.238
	10F1NKR	10-32 UNC	#1	.027 - .125	.543	.311	.016	.2715	.276
	10F2NKR	10-32 UNC	#2	.125 - .224	.650	.311	.016	.2715	.276
	25C1NKR	1/4-20 UNC	#1	.027 - .125	.594	.371	.016	.3315	.336
	25C2NKR	1/4-20 UNC	#2	.125 - .224	.701	.371	.016	.3315	.336
	31C1NKR	5/16-18 UNC	#1	.027 - .125	.744	.453	.016	.4125	.417
	31C2NKR	5/16-18 UNC	#2	.125 - .224	.850	.453	.016	.4125	.417
	37C1NKR	3/8-16 UNC	#1	.030 - .140	.906	.531	.020	.4915	.496
	37C2NKR	3/8-16 UNC	#2	.140 - .240	1.012	.531	.020	.4915	.496
	50C1NKR	1/2-13 UNC	#1	.039 - .157	1.063	.669	.024	.6285	.634

	PART CODE	THREAD SIZE (METRIC)	GRIP CODE	GRIP RANGE	LENGTH REF.	HEAD DIA REF.	HEAD HEIGHT REF.	BODY DIA. REF.	HOLE SIZE +.00/-.01
METRIC	.30C1NKR	M3	#1	0.25 - 2.00	9.75	6.00	0.30	5.00	5.10
	.40C1NKR	M4	#1	0.25 - 3.00	9.50	7.00	0.30	6.00	6.10
	.40C2NKR	M4	#2	3.00 - 4.50	12.25	7.00	0.30	6.00	6.10
	.50C1NKR	M5	#1	0.25 - 3.00	12.00	8.00	0.40	6.90	7.10
	.50C2NKR	M5	#2	3.00 - 5.50	15.00	8.00	0.40	6.90	7.10
	.60C1NKR	M6	#1	0.50 - 3.00	14.50	10.00	0.40	8.90	9.10
	.60C2NKR	M6	#2	3.00 - 5.50	16.50	10.00	0.40	8.90	9.10
	.80C1NKR	M8	#1	0.50 - 3.00	16.50	12.00	0.40	10.90	11.10
	.80C2NKR	M8	#2	3.00 - 5.50	18.50	12.00	0.40	10.90	11.10
	.100C1NKR	M10	#1	0.50 - 3.50	19.50	14.00	0.50	13.00	13.10
	.100C2NKR	M10	#2	3.50 - 6.00	21.50	14.00	0.50	13.00	13.10
	.120C1NKR	M12	#1	1.00 - 4.00	25.00	17.00	0.60	16.00	16.10

THE PART NUMBER IS COMPLETE BY ADDING THE MATERIAL AND FINISH CODES AS A SUFFIX TO THE PART CODE:

MATERIAL/FINISH CODES:
- SY = STEEL, ZINC YELLOW ROHS
- SZ = STEEL, ZINC CLEAR ROHS ₮
- SC = STEEL, CAD YELLOW PLATED
- SZN = STEEL, ZINC NICKEL 800 HOURS
- BP = BRASS, PLAIN FINISH

EXAMPLE:
Part Code 6C1NKR in Steel,
Zinc Clear Plating is... 6C1NKRSZ

₮ Indicates stocked configurations

NKC SERIES™ COUNTERSUNK HEAD - KNURLED BODY

EUROPEAN STANDARD RIVETNUTS • HEAVYWALL RIVETNUTS

ROHS COMPLIANT

The RivetKing NKC Series is a heavywall/thickwall Rivetnut. This robust design upgrades the thickness of both the body and the head height. Additionally it features a thick countersunk head for high strength and flush installation. The robust NKC series offers higher pullout resistance and increased endurance of the joint and assembly. Spin-Pull tools are recommended for installation of NSL series rivetnuts.

NKC SERIES

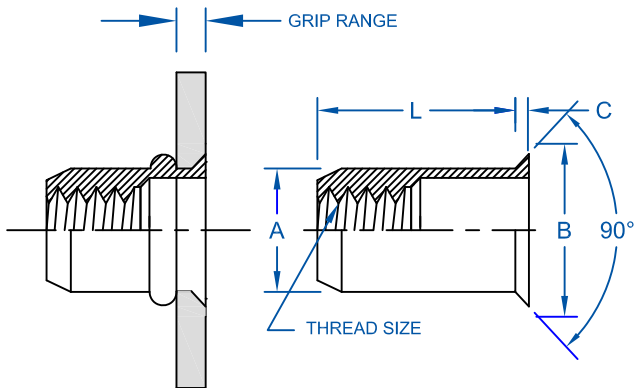

PART CODE	THREAD SIZE (METRIC)	GRIP CODE	GRIP RANGE	LENGTH REF.	HEAD DIA REF.	HEAD HEIGHT REF.	BODY DIA. REF.	HOLE SIZE +.003/-.000
.40C1NKC	M4	#1	1.00 - 3.00	9.50	9.00	1.00	6.00	6.10
.50C1NKC	M5	#1	1.50 - 4.00	12.00	10.00	1.00	7.00	7.10
.60C1NKC	M6	#1	1.50 - 4.00	14.50	13.00	1.50	9.00	9.10
.80C1NKC	M8	#1	1.50 - 4.00	25.00	23.00	2.00	16.00	16.10

THE PART NUMBER IS COMPLETE BY ADDING THE MATERIAL AND FINISH CODES AS A SUFFIX TO THE PART CODE:

MATERIAL/FINISH CODES:
SY = STEEL, ZINC YELLOW ROHS
SZ = STEEL, ZINC CLEAR ROHS ₮
SC = STEEL, CAD YELLOW PLATED
SZN = STEEL, ZINC NICKEL 800 HOURS
BP = BRASS, PLAIN FINISH

EXAMPLE:
Part Code 6C1NKR in Steel,
Zinc Clear Plating is... 6C1NKRSZ

₮ Indicates stocked configurations

NSL SERIES™ SERRATED LARGE HEAD - SMOOTH BODY

EUROPEAN STANDARD RIVETNUTS • HEAVYWALL RIVETNUTS

ROHS COMPLIANT

The RivetKing NSL Series is a heavywall/thickwall Rivetnut. This robust design upgrades the thickness of both the body and the head height. Additionally it features a serrated head which reduces the possibility of spin out. The robust NSL series offers higher pullout resistance and increased endurance of the joint and assembly. Spin-Pull tools are recommended for installation of NSL series rivetnuts.

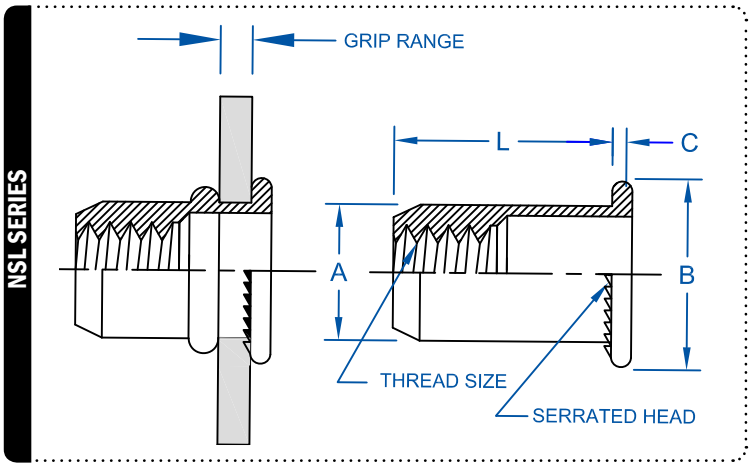

PART CODE	THREAD SIZE (METRIC)	GRIP CODE	GRIP RANGE	LENGTH REF.	HEAD DIA REF.	HEAD HEIGHT REF.	BODY DIA. REF.	HOLE SIZE +.003/-.000
.40C1NSL	M4	#1	0.25 - 3.00	9.50	9.00	1.00	6.00	6.10
.40C2NSL	M4	#2	3.00 - 4.50	12.25	9.00	1.00	6.00	6.10
.50C1NSL	M5	#1	0.25 - 3.00	12.00	10.00	1.00	7.00	7.10
.50C2NSL	M5	#2	3.00 - 5.50	15.00	10.00	1.00	7.00	7.10
.60C1NSL	M6	#1	0.50 - 3.00	14.50	13.00	1.50	9.00	9.10
.60C2NSL	M6	#2	3.00 - 5.50	16.50	13.00	1.50	9.00	9.10
.80C1NSL	M8	#1	0.50 - 3.00	16.50	16.00	1.50	11.00	11.10
.80C2NSL	M8	#2	3.00 - 5.50	18.50	16.00	1.50	11.00	11.10
.100C1NSL	M10	#1	1.00 - 3.50	17.50	16.00	1.70	12.00	12.10
.120C1NSL	M12	#1	1.00 - 4.00	25.00	23.00	2.00	16.00	16.10

THE PART NUMBER IS COMPLETE BY ADDING THE MATERIAL AND FINISH CODES AS A SUFFIX TO THE PART CODE:

MATERIAL/FINISH CODES:
SY = STEEL, ZINC YELLOW ROHS
SZ = STEEL, ZINC CLEAR ROHS ₮
SC = STEEL, CAD YELLOW PLATED
SZN = STEEL, ZINC NICKEL 800 HOURS
BP = BRASS, PLAIN FINISH

EXAMPLE:
Part Code 6C1NKR in Steel,
Zinc Clear Plating is... 6C1NKRSZ

₮ Indicates stocked configurations

NHL SERIES™ FULL HEX BODY - LARGE HEAD

EUROPEAN STANDARD RIVETNUTS • HEAVYWALL RIVETNUTS

ROHS COMPLIANT

The RivetKing NHL Series is a heavywall European Style Rivetnut. This robust design upgrades the thickness of both the body and the head height which provides higher pullout resistance and increased endurance of the joint and assembly. NIK series has a large head and a full hex shaped body which resist spin out. Spin-Pull tools are recommended for installation of NHL series rivetnuts.

NHL SERIES

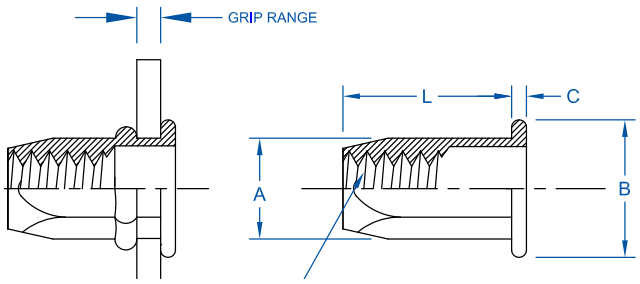

	PART CODE	THREAD SIZE (INCH)	GRIP CODE	GRIP RANGE	OVERALL LENGTH REF	HEAD DIAMETER REF.	HEAD HEIGHT REF.	BODY DIAMETER ACROSS FLATS REF.	HOLE SIZE ACROSS FLATS +.000/-.004
INCH	8C1NHL	8-32 UNC	#1	.027 - .125	.402	.354	.039	.235	.240
	10F1NHL	10-32 UNF	#1	.027 - .125	.571	.394	.039	.275	.280
	25C1NHL	1/4-20 UNC	#1	.027 - .125	.638	.512	.059	.354	.361
	31C1NHL	5/16-18 UNC	#1	.027 - .125	.717	.630	.059	.432	.440
	31C2NHL	5/16-18 UNC	#2	.125 - .220	.827	.630	.059	.432	.440
	37C1NHL	3/8-16 UNC	#1	.030 - .140	.906	.748	.079	.511	.519

	PART CODE	THREAD SIZE (METRIC)	GRIP CODE	GRIP RANGE	LENGTH REF.	HEAD DIAMETER REF.	HEAD HEIGHT REF.	BODY DIAMETER ACROSS FLATS REF.	HOLE SIZE ACROSS FLATS +.00/-.01
METRIC	.40C1NHL	M4	#1	0.25 - 2.00	10.00	9.00	1.00	6.00	6.10
	.50C1NHL	M5	#1	0.50 - 3.00	13.00	10.00	1.00	7.00	7.10
	.60C1NHL	M6	#1	0.50 - 3.00	14.50	13.00	1.50	9.00	9.10
	.80C1NHL	M8	#1	0.50 - 3.00	16.50	16.00	1.50	11.00	11.10
	.80C2NHL	M8	#2	3.00 - 5.50	19.50	16.00	1.50	11.00	11.10
	.100C1NHL	M10	#1	1.00 - 3.50	21.00	19.00	2.00	13.00	13.10
	.120C1NHL	M12	#1	1.00 - 4.00	25.00	23.00	2.00	16.00	16.10

THE PART NUMBER IS COMPLETE BY ADDING THE MATERIAL AND FINISH CODES AS A SUFFIX TO THE PART CODE:

MATERIAL/FINISH CODES:
- SY = STEEL, ZINC YELLOW ROHS
- SZ = STEEL, ZINC CLEAR ROHS ₮
- SC = STEEL, CAD YELLOW PLATED
- SZN = STEEL, ZINC NICKEL 800 HOURS
- BP = BRASS, PLAIN FINISH

EXAMPLE:
Part Code 6C1NHL in Steel,
Zinc Clear Plating is... 6C1NHLSZ

₮ Indicates stocked configurations

NHR SERIES™ FULL HEX BODY · REDUCED HEAD

EUROPEAN STANDARD RIVETNUTS • HEAVYWALL RIVETNUTS

The RivetKing NHR Series is a heavywall European Style Rivetnut. This robust design upgrades the thickness of both the body which provides increased endurance of the joint and assembly. NHR series has a reduced head and a full hex shaped body which resist spin out. Spin-Pull tools are recommended for installation of NHR series rivetnuts.

NHR SERIES

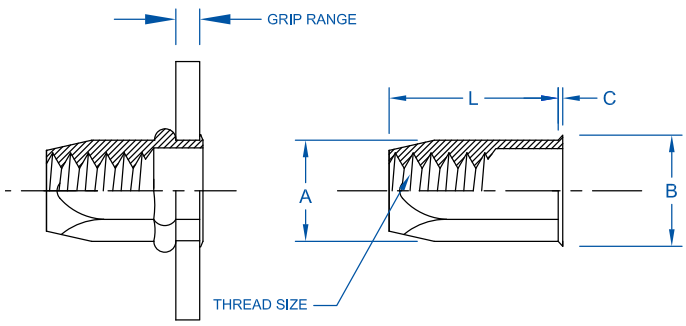

	PART CODE	THREAD SIZE (INCH)	GRIP CODE	GRIP RANGE	OVERALL LENGTH REF	HEAD DIA ACROSS FLATS REF.	HEAD HEIGHT REF.	BODY DIAMETER ACROSS FLATS REF.	HOLE SIZE ACROSS FLATS +.000/-.004
INCH	8C1NHR	8-32 UNC	#1	.027 - .125	.402	.260	.012	.235	.240
	10F1NHR	10-32 UNF	#1	.027 - .125	.571	.311	.016	.275	.280
	25C1NHR	1/4-20 UNC	#1	.027 - .125	.638	.390	.016	.354	.361
	31C1NHR	5/16-18 UNC	#1	.027 - .125	.717	.457	.016	.432	.440
	31C2NHR	5/16-18 UNC	#2	.125 - .220	.827	.457	.016	.432	.440
	37C1NHR	3/8-16 UNC	#1	.030 - .140	.906	.559	.020	.511	.519

	PART CODE	THREAD SIZE (METRIC)	GRIP CODE	GRIP RANGE	LENGTH REF.	HEAD DIA ACROSS FLATS REF.	HEAD HEIGHT REF.	BODY DIAMETER ACROSS FLATS REF.	HOLE SIZE ACROSS FLATS +.00/-.01
METRIC	.40C1NHR	M4	#1	0.25 - 2.00	10.00	6.60	.30	6.00	6.10
	.50C1NHR	M5	#1	0.50 - 3.00	13.00	7.70	.40	7.00	7.10
	.60C1NHR	M6	#1	0.50 - 3.00	14.50	9.80	.40	9.00	9.10
	.80C1NHR	M8	#1	0.50 - 3.00	16.50	11.80	.40	11.00	11.10
	.80C2NHR	M8	#2	3.00 - 5.50	19.50	11.80	.40	11.00	11.10
	.100C1NHR	M10	#1	1.00 - 3.50	21.00	14.00	.50	13.00	13.10
	.120C1NHR	M12	#1	1.00 - 4.00	25.00	17.50	.60	16.00	16.10

THE PART NUMBER IS COMPLETE BY ADDING THE MATERIAL AND FINISH CODES AS A SUFFIX TO THE PART CODE:

MATERIAL/FINISH CODES:
SY = STEEL, ZINC YELLOW ROHS
SZ = STEEL, ZINC CLEAR ROHS ₮
SC = STEEL, CAD YELLOW PLATED
SZN = STEEL, ZINC NICKEL 800 HOURS
BP = BRASS, PLAIN FINISH

EXAMPLE:
Part Code 6C1NHR in Steel,
Zinc Clear Plating is... 6C1NHRSZ

₮ Indicates stocked configurations

CROSS REFERENCE TABLE BY PART NUMBER

RIVETKING®	AVK®	ATLAS®	SHEREX®	MARSON®	CELUS®	POP®
6C1IKFSY	ALS4-632-80	AELS-632-80	CAL2-0632-080	57310		TLS1-632-80
6C2IKFSY	ALS4-632-130	AELS-632-130	CAL2-0632-130	57312		TLS1-632-130
8C1IKFSY	ALS4-832-80	AELS-832-80	CAL2-0832-080	57320		TLS1-832-80
8C2IKFSY	ALS4-832-130	AELS-832-130	CAL2-0832-130	57321		TLS1-832-130
10C1IKFSY	ALS4-1024-130		CAL2-1024-130	57330		TLS1-1024-130
10C2IKFSY	ALS4-1024-225		CAL2-1024-225	57332		TLS1-1024-225
10F1IKFSY	ALS4-1032-130	AELS-1032-130	CAL2-1032-130	57340		TLS1-1032-130
10F2IKFSY	ALS4-1032-225	AELS-1032-225	CAL2-1032-225	57342		TLS1-1032-225
25C1IKFSY	ALS4-420-165	AELS-420-165	CAL2-2520-165	57350		TLS1-420-165
25C2IKFSY	ALS4-420-260	AELS-420-260	CAL2-2520-260	57354		TLS1-420-260
31C1IKFSY	ALS4-518-150	AELS-518-150	CAL2-3118-150	57371		TLS1-518-150
31C2IKFSY	ALS4-518-312	AELS-518-312	CAL2-3118-312	57374		TLS1-518-312
37C1IKFSY	ALS4-616-150	AELS-616-150	CAL2-3716-150	57381		TLS1-616-150
37C2IKFSY	ALS4-616-312	AELS-616-312	CAL2-3716-312	57382		TLS1-616-312
50C1IKFSY	ALS4-813-200	AELS-813-200	CAL2-5013-200			TLS1-813-200
50C2IKFSY	ALS4-813-350	AELS-813-350	CAL2-5013-350			TLS1-813-350
6C1IKRSY	AKS4-632-080	AEKS-632-80	CAK2-0632-080	56810		TKS1-632-80
6C2IKRSY	AKS4-632-130	AEKS-632-130	CAK2-0632-130	56812		TKS1-632-130
8C1IKRSY	AKS4-832-080	AEKS-832-80	CAK2-0832-080	56820		TKS1-832-80
8C2IKRSY	AKS4-832-130	AEKS-832-130	CAK2-0832-130	56821		TKS1-832-130
10C1IKRSY	AKS4-1024-130		CAK2-1024-130	56830		TKS1-1024-130
10C2IKRSY	AKS4-1024-225		CAK2-1024-225	56832		TKS1-1024-225
10F1IKRSY	AKS4-1032-130	AEKS-1032-130	CAK2-1032-130	56840		TKS1-10332-130
10F2IKRSY	AKS4-1032-225	AEKS-1032-225	CAK2-1032-225	56842		TKS1-1032-225
25C1IKRSY	AKS4-420-165	AEKS-420-165	CAK2-2520-165	56850		TKS1-420-165
25C2IKRSY	AKS4-420-260	AEKS-420-260	CAK2-2520-260	56854		TKS1-420-260
31C1IKRSY	AKS4-518-150	AEKS-518-150	CAK2-3118-150	56871		TKS1-518-150
31C2IKRSY	AKS4-518-312	AEKS-518-312	CAK2-3118-312	56874		TKS1-518-312
37C1IKRSY	AKS4-616-150	AEKS-616-150	CAK2-3716-150	56881		TKS1-616-150
37C2IKRSY	AKS4-616-312	AEKS-616-312	CAK2-3716-312	56882		TKS1-616-312
4C1IRLSZ	RNS-440-60		CA-0440S-060			
4C2IRLSZ	RNS-440-85		CA-0440S-085			
4C3IRLSZ	RNS-440-110		CA-0440S-110			
6C1IRLSZ	RNS-632-75		CA-0632S-075	57110		
6C2IRLSZ	RNS-632-120		CA-0632S-120			
6C3IRLSZ	RNS-632-160		CA-0632S-160			
8C1IRLSZ	RNS-832-75		CA-0832S-075	57120		
8C2IRLSZ	RNS-832-120		CA-0832S-120	57121		
8C3IRLSZ	RNS-832-160		CA-0832S-160			
10C1IRLSZ			CA-1024S-080	57130		
10C2IRLSZ			CA-1024S-130	57132		
10C3IRLSZ			CA-1024S-180			
10F1IRLSZ	RNS-1032-80		CA-1032S-080	57140		
10F2IRLSZ	RNS-1032-130		CA-1032S-130	57142		
10F3IRLSZ	RNS-1032-180		CA-1032S-180			
25C1IRLSZ	RNS-420-80		CA-2520S-080	57150		STS1-420-80
25C2IRLSZ	RNS-420-140		CA-2520S-140	57152		STS1-420-140
25C3IRLSZ	RNS-420-200		CA-2520S-200	57154		STS1-420-200
31C1IRLSZ	RNS-518-125		CA-3118S-125	57171		STS1-518-125
31C2IRLSZ	RNS-518-200		CA-3118S-200	57174		STS1-518-200
31C3IRLSZ	RNS-518-275		CA-3118S-275			–
37C1IRLSZ	RNS-616-115		CA-3716S-115	57181		STS1-616-115
37C2IRLSZ	RNS-616-200		CA-3716S-200	57184		STS1-616-200
37C3IRLSZ	RNS-616-285		CA-3716S-285			–
50C1IRLSZ	RNS-813-150		CA-5013S-150			STS1-813-150
50C2IRLSZ	RNS-813-250		CA-5013S-250			STS1-813-250
50C3IRLSZ	RNS-813-350		CA-5013S-350			
6C1IRRSZ	AOS4-632-80	AEOS-632-80	CAO2-0632-080	57415	CS632-080-SF	
8C1IRRSZ	AOS4-832-80	AEOS-832-80	CAO2-0832-080	57425	CS832-080-SF	
10C1IRRSZ	AOS4-1024-130	AEOS-1024-130	CAO2-1024-130	57435	CS1024-130-SF	
10F1IRRSZ	AOS4-1032-130	AEOS-1032-130	CAO2-1032-130	57445	CS1032-130-SF	
25C1IRRSZ	AOS4-420-165	AEOS-420-165	CAO2-2520-165	57455	CS1420-165-SF	
31C1IRRSZ	AOS4-518-200	AEOS-518-200	CAO2-3118-200	57475	CS51618-200-SF	
37C1IRRSZ	AOS4-616-200	AEOS-616-200	CAO2-3716-200	57485	CS3816-200-SF	
6C1IRRAP				57510	CA632-080-SF	
8C1IRRAP				57520	CA832-080-SF	
10C1IRRAP				57530	CA1024-130-SF	
10F1IRRAP				57540	CA1032-130-SF	
25C1IRRAP				57550	CA1420-165-SF	
31C1IRRAP				57575	CA51618-200-SF	
37C1IRRAP				57585	CA3816-200-SF	

AVK® IS A REGISTERED TRADEMARK OF SFS® FASTENERS, A DIVISION OF PCC® COMPANY. ATLAS® IS A REGISTERED TRADEMARK OF PENN ENGINEERING®. SHEREX® IS A REGISTERED TRADEMAR OF SHEREX FASTENING SOLUTIONS®. POP® IS A REGISTERED TRADE MARK OF EMHART CORPORATION®, A DIVISION OF BLACK & DECKER®. MARSON® IS A REGISTERED TRADE MARK OF ALCOA®. CELUS® AND RIVETKING® IS A REGISTERED TRADEMARK OF THE INDUSTRIAL RIVET & FASTENER COMPANY, INC.

CROSS REFERENCE TABLE BY PART NUMBER

RIVETKING®	AVK®	ATLAS®	SHEREX®	MARSON®	CELUS®	POP®
6C1ISNSZ	AWS2-632		CFW2-0632			
8C1ISNSZ	AWS2-832		CFW2-0832			
10C1ISNSZ	AWS2-1024		CFW2-1024			
10F1ISNSZ	AWS2-1032		CFW2-1032			
25C1ISNSZ	AWS2-420		CFW2-2520			
31C1ISNSZ	AWS2-518		CFW2-3118			
37C1ISNSZ	AWS2-616		CFW2-3716			
4C1ISRSZ	ATS2-440	AETS-440	CFT2-0440			
6C1ISRSZ	ATS2-632	AETS-632	CFT2-0632	57810		
8C1ISRSZ	ATS2-832	AETS-832	CFT2-0832	57820		
10C1ISRSZ	ATS2-1024	AETS-1024	CFT2-1024	57830		
10F1ISRSZ	ATS2-1032	AETS-1032	CFT2-1032	57840		
25C1ISRSZ	ATS2-420	AETS-420	CFT2-2520	57850		
31C1ISRSZ	ATS2-518	AETS-518	CFT2-3118	57871		
37C1ISRSZ	ATS2-616	AETS-616	CFT2-3716	57881		
50C1ISRSZ	ATS2-813	AETS-813	CFT2-5013			
6C1IHFSY	AHS4-632-80	AEHS-632-80	CAH2-0632-080	52610		THS1-632-80
6C2IHFSY	AHS4-632-130	AEHS-632-130	CAH2-0632-130	52612		THS1-632-130
8C1IHFSY	AHS4-832-80	AEHS-832-80	CAH2-0832-080	52620		THS1-832-80
8C2IHFSY	AHS4-832-130	AEHS-832-130	CAH2-0832-130	52621		THS1-832-130
10C1IHFSY	AHS4-1024-130		CAH2-1024-130	52630		THS1-1024-130
10C2IHFSY	AHS4-1024-225		CAH2-1024-225	52632		THS1-1024-225
10F1IHFSY	AHS4-1032-130	AEHS-1032-130	CAH2-1032-130	52640		THS1-1032-130
10F2IHFSY	AHS4-1032-225	AEHS-1032-225	CAH2-1032-225	52642		THS1-1032-225
25C1IHFSY	AHS4-420-165	AEHS-420-165	CAH2-2520-165	52650		THS1-420-165
25C2IHFSY	AHS4-420-260	AEHS-420-260	CAH2-2520-260	52654		THS1-420-260
31C1IHFSY	AHS4-518-150	AEHS-518-150	CAH2-3118-150	52671		THS1-518-150
31C2IHFSY	AHS4-518-312	AEHS-518-312	CAH2-3118-312	52674		THS1-518-312
37C1IHFSY	AHS4-616-150	AEHS-616-150	CAH2-3716-150	52681		THS1-616-150
37C2IHFSY	AHS4-616-312	AEHS-616-312	CAH2-3716-312	52684		THS1-616-312
JF-3100						E632
JF-3250						C632
JF-4100						B832
JF-5150						10S
JF-5170						Q1032
JF-5190						H1032
JF-5250						10SL
JF-6150						1/4S
JF-6200						D1420
JF-6250						J1420
JF-8200						E51618
JF-8250						F51618
JF-1027						A3816
JK-0401						4SJN
JK-0402						4LJN
JK-0501						6SJN
JK-0502						6LJN
JK-0601						8SJN
JK-0602						8LJN
10F1IPBSY			CPB2-1032-175			
10F2IPBSY			CPB2-1032-320			
25C1IPBSY	ARS4-420-280	AES25P280PB	CPB2-2520-280			
25C2IPBSY	ARS4-420-500	AES25P500PB	CPB2-2520-500			
31C1IPBSY	ARS4-518-280	AES31P280PB	CPB2-3118-280			
31C2IPBSY	ARS4-518-500	AES31P500PB	CPB2-3118-500			
.50C1IPBSY			CPB2-580-4.45			
.50C2IPBSY			CPB2-580-8.1			
.60C1IPBSY	ARS4-610-7.1	AESM6P7.1PB	CPB2-610-7.1			
.60C2IPBSY	ARS4-610-12.7	AESM6P12.7PB	CPB2-610-12.7			
.80C1IPBSY	ARS4-8125-7.1	AESM8P7.1PB	CPB2-8125-7.1			
.80C2IPBSY	ARS4-8125-12.7	AESM8P12.7PB	CPB2-8125-12.7			
10F1IPNSY			CPN2-1032-175			
10F2IPNSY			CPN2-1032-320			
25C1IPNSY	ARS4-420-280		CPN2-2520-280			
25C2IPNSY	ARS4-420-500		CPN2-2520-500			
31C1IPNSY	ARS4-518-280		CPN2-3118-280			
31C2IPNSY	ARS4-518-500		CPN2-3118-500			
.50C1IPNSY			CPN2-580-4.45			
.50C2IPNSY			CPN2-580-8.1			
.60C1IPNSY	ARS4-610-7.1		CPN2-610-7.1			
.60C2IPNSY	ARS4-610-12.7		CPN2-610-12.7			
.80C1IPNSY	ARS4-8125-7.1		CPN2-8125-7.1			
.80C2IPNSY	ARS4-8125-12.7		CPN2-8125-12.7			

AVK® IS A REGISTERED TRADEMARK OF SPS® FASTENERS, A DIVISION OF PCC® COMPANY. ATLAS® IS A REGISTERED TRADEMARK OF PENN ENGINEERING®. SHEREX® IS A REGISTERED TRADEMAR OF SHEREX FASTENING SOLUTIONS®. POP® IS A REGISTERED TRADEMARK OF EMHART CORPORATION®, A DIVISION OF BLACK & DECKER®. MARSON® IS A REGISTERED TRADE MARK OF ALCOA® . CELUS® AND RIVETKING® IS A REGISTERED TRADEMARK OF THE INDUSTRIAL RIVET & FASTENER COMPANY, INC.